DATE	DESCRIPTION OF CHANGE	REV
2023-04-08	XXXXX	A

WIRE DIAGRAM

P1		P2	
GND	A1	A19	GND
PERP0	A2	A18	PERp0
PERN0	A3	A17	PERn0
GND	A4	A16/A22	GND
PERP1	A5	A21	PERp1
PERN1	A6	A20	PERn1
GND	A7	A19/B16	GND
CLK_0_P	A8	B15	RefClk0+
CLK_0_N	A9	B14	RefClk0-
ATLAS_SCL	A11	A7	SMClk
ATLAS_SDA	A12	A8	SMDat
GND	A13	A25	GND
PERP2	A14	A24	PERp2
PERN2	A15	A23	PERn2
GND	A16	A22/A28	GND
PERP3	A17	A27	PERp3
PERN3	A18	A26	PERn3
GND	A19	A25	GND
GND	B1	B19	GND
PETP0	B2	B18	PETp0
PETN0	B3	B17	PETn0
GND	B4	B16/B22	GND
PETP1	B5	B21	PETp1
PETN1	B6	B20	PETn1
GND	B7	B19/A16	GND
CLK_1_N	B8	A14	RefClk1-
CLK_1_P	B9	A15	RefClk1+
PERST#_0	B11	B10	ePerst0#
PERST#_1	B12	A11	ePerst1#
GND	B13	B25	GND
PETP2	B14	B24	PETp2
PETN2	B15	B23	PETn2
GND	B16	B22/B28	GND
PETP3	B17	B27	PETp3
PETN3	B18	B26	PETn3
GND	B19	B25	GND
		B1	12V
		B2	12V
		B3	12V
		B4	12V
		B5	12V
		B6	12V
		B7	MFG
		B8	RFU
		B9	Dual Port EN#
		B11	3.3V
		B12	PWRDIS
		A1	GND
		A2	GND
		A3	GND
		A4	GND
		A5	GND
		A6	GND
		A9	SMBRST#
		A10	LED#ACTIVITY
		A12	PRSNT0#

100Ω

100Ω

P3

P13-P14-P15 | 12V
18AWG YELLOW

P1-P2-P3 | 3.3V
24AWG ORANGE

P4-P5-P6 | GND
18AWG BLACK

NOTE:
B9 OF P2 IS OPEN.
P2端的B9为开路.

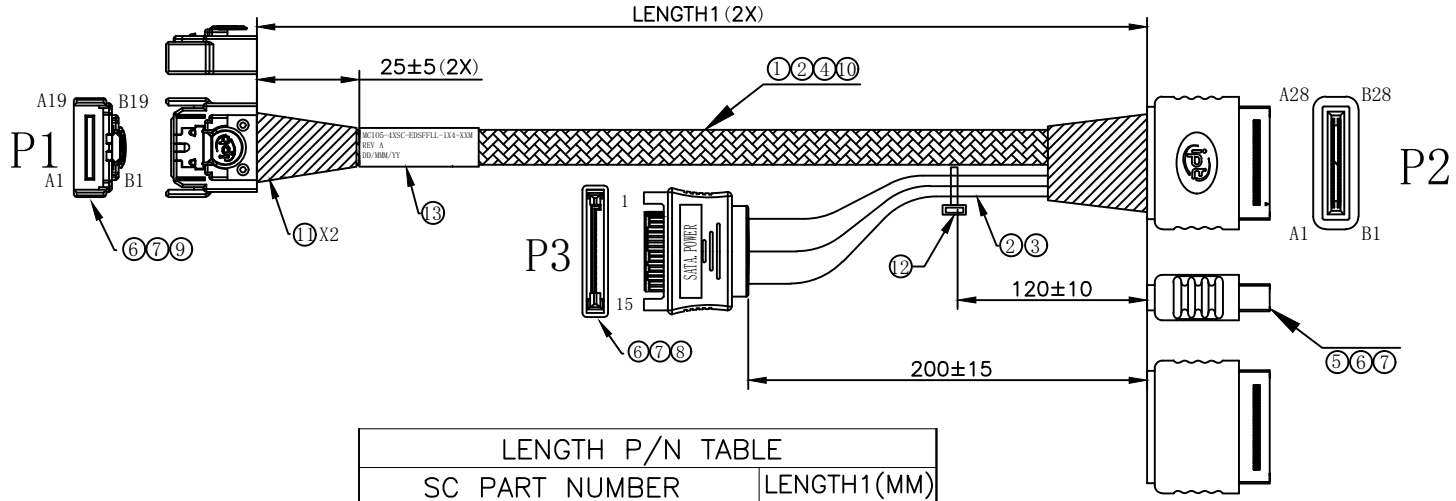

LENGTH P/N TABLE	
SC PART NUMBER	LENGTH1(MM)
MCIO5-4XSC-EDSFFLL-1X4-0.5M	500±15
MCIO5-4XSC-EDSFFLL-1X4-0.75M	750±15
MCIO5-4XSC-EDSFFLL-1X4-1M	1000±25
MCIO5-4XSC-EDSFFLL-1X4-1.5M	1500±15

TEST CONDITIONS:
1. ELECTRICAL AND MECHANICAL PERFORMANCE SHOULD MEET THE PCIE GEN5 INDUSTRIAL STANDARD.
电气特性遵循PCIE GEN5工业标准.
2. THE CABLE ASSEMBLY SHALL BE RoHS2.0 COMPLIANT.
该产品通过RoHS2.0认证.
3. THE CABLE ASSEMBLY SHALL MEET BELOW IMPEDANCE REQUIREMENT:TERMINATION AREA:85±15%OHMS,CABLE ABSOLUTE AREA: 85±10% OHMS.
该产品满足下面阻抗特性:接触区域85±15%欧姆,线材为85±10%欧姆.

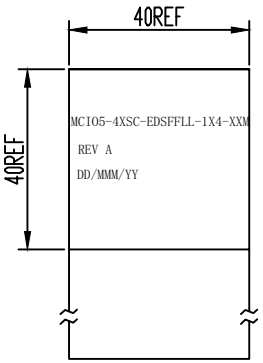

LABEL

NO.	NAME	IPT NO.	DESCRIPTION	Q'TY	Q'TY
⑬	LABEL		LABEL :40*40MM	1	PCS
⑫	TIE		CABLE TIE:L=100MM	1	PCS
⑪	Adhesive tape		IERMLENE CLOTH TAPE,T=0.11mm.BLK.	-	MM
⑩	Network manager		EXPANDO TUBE:OD=7MM,BLACK,VW-1,	-	MM
⑨	Connector		MCIO STR With shrapnel	1	PCS
⑧	Connector		SATA15P M PRS LCP BLK	1	PCS
⑦	External Mould		PVC 45P BLACK	-	KG
⑥	Internal Mold		PE See through	-	KG
⑤	PCB		SF4HH1002 88 Euro 4-layer SFF-1002 1C-56PIN PCB	1	PCS
④	CABLE		STYLE20744 80° C 30V 30AWG VW-1	-	MM
③	CABLE		UL1007 24AWG TS-LF-00	-	MM
②	CABLE		UL1007 18AWG TS -LF- 01	-	MM
①	CABLE		29AWG 85Ω HF PCIE: 6.0 Low loss (P06S62901)	-	MM

serial CABLES

TITLE	MCIO5 38P to GenZ 1C 56P receptacle w/15P power					SHEET	1/1
CUSTOMER		CUSTOMER P/N	MCIO5-4XSC-EDSFFLL-1X4-XXM			DRAWING	chenlingmin
DWG NO.	WIPT20230408003	UNIT	SCALE	REV	VIEW	CHECKED	liupeng
IPT P/N		mm	NONE	A		APPROVAL	