REV.	REMARK	DATE	SIGN.

RoHS

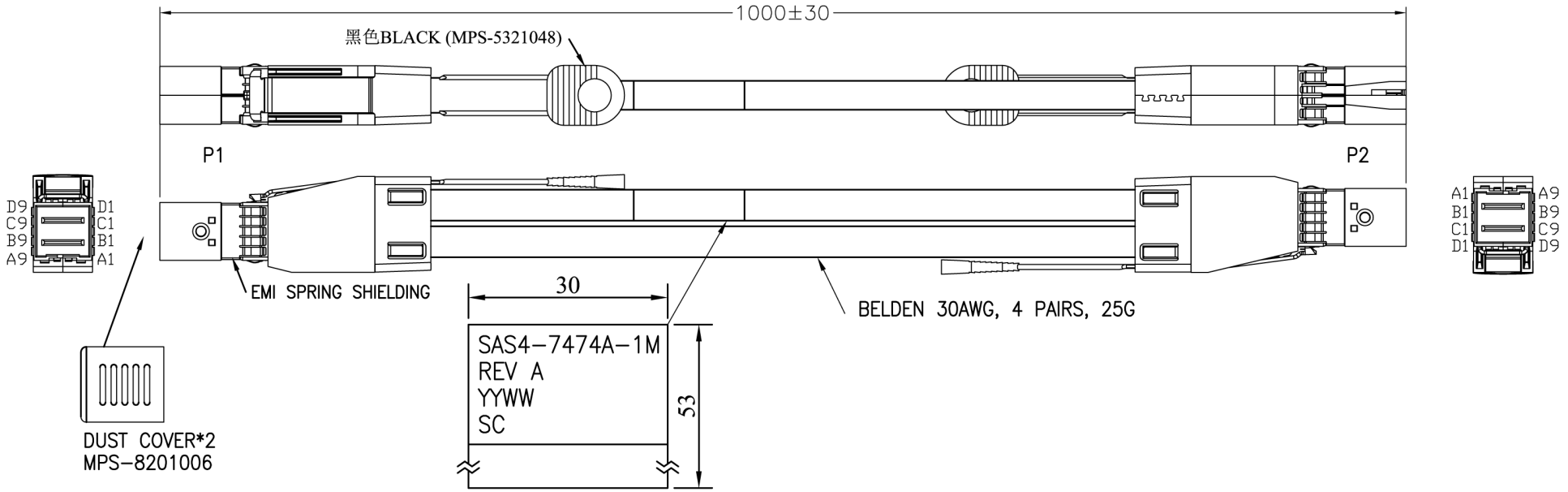

Material RoHS Compliant:

1.CABLE:
- CONDUCTOR: 30AWG SILVER PLATED COPPER.
  - 8 CORES: 4 PAIRS
- INSULATION: POLYOLEFIN.
- DRAIN WIRE: 30AWG SILVER PLATED COPPER.
  - YELLOW SHIELDING TAPE METAL SIDE INWARDS COVERAGE >=100%
  - HOT-MELT PET COVERAGE >=100%
- BRAID SHIELD: TINNED COPPER COVERAGE >=85%
- JACKET: PVC
- OUTER DIAMETER: 5.60±0.35mm
- MARKING: BELDEN L-Skew 30A2C21-1 E357312-S
  - AWM STYLE 20276 30AWG 80C 30V VW-1 RoHS YYYY/MM/DD XXXXXXM

2.CONNECTOR:
- P1,P2: Mini SAS HD 4x CABLE PLUG (SFF-8674)
  - (1) P.C.B: GOLD PLATING ON CONTACT PADS.
  - (2) LATCH: STAINLESS STEEL
  - (3) BACKSHELL: ZINC DIE CASTING HOOD/ NICKEL PLATING
  - (4) PULL TAB: NYLON UL94V-0, COLOR: BLACK(MPS-5321048)
  - (5) EMI SPRING SHIELDING

3.FOR SAS 24.0 Gbps.

4.TWO-WIRED SERIAL MEMORY: ATMEL AT24C02D EEPROM (256 BYTES).

5.LABELING ON BAG:

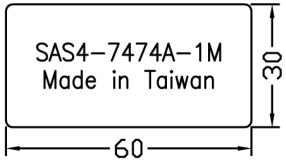

SERIAL CABLES	DESC.	Mini SAS HD 4x*2 FOR SAS 4.0 CABLE ASS'Y		APPROVED	CHECKED	DESIGNED	TOLERANCE	SCALE	*	UNIT	mm		
	P/N	B-6681	CUSTOMER P/N	SAS4-7474A-1M			Sino		DATE	12/03/'18	DWG NO:	DWG\B\6681	

REV.	REMARK	DATE	SIGN.

WIRING DIAGRAM

HIGH SPEED SIGNAL			
P1(Mini SAS HD 4x Plug)		P2(Mini SAS HD 4x Plug)	
PAD	SIGNAL	PAD	SIGNAL
A4	RX1+	C4	TX1+
A5	RX1−	C5	TX1−
A7	RX3+	C7	TX3+
A8	RX3−	C8	TX3−
B4	RX0+	D4	TX0+
B5	RX0−	D5	TX0−
B7	RX2+	D7	TX2+
B8	RX2−	D8	TX2−
C4	TX1+	A4	RX1+
C5	TX1−	A5	RX1−
C7	TX3+	A7	RX3+
C8	TX3−	A8	RX3−
D4	TX0+	B4	RX0+
D5	TX0−	B5	RX0−
D7	TX2+	B7	RX2+
D8	TX2−	B8	RX2−
GND GROUP	GND	GND GROUP	GND

GND GROUP 1:
P1−A3,A6,A9,B3,B6,B9, P2−C3,C6,C9,D3,D6,D9
GND GROUP 2:
P1−C3,C6,C9,D3,D6,D9, P2−A3,A6,A9,B3,B6,B9

CONNECTOR SHELL	CONNECTOR SHELL

LOW SPEED SIGNAL & POWER		
P1,P2(Mini SAS HD 4x Plug)		
PAD	SIGNAL	
A1	Reserved	N.C.
A2	IntL	N.C.
B1	Vact	N.C.
B2	ModPrsL	GND
C1	SCL	SERIAL EEPROM
C2	SDA	SERIAL EEPROM → GND
D1	Vact	N.C.
D2	Vman	

DESC.	Mini SAS HD 4x*2 FOR SAS 4.0 CABLE ASS'Y		APPROVED	CHECKED	DESIGNED	TOLERANCE	SCALE	*	UNIT	mm		
P/N	B-6681	CUSTOMER P/N			Sino		DATE	12/03/'18	DWG NO:	DWG\B\6681		